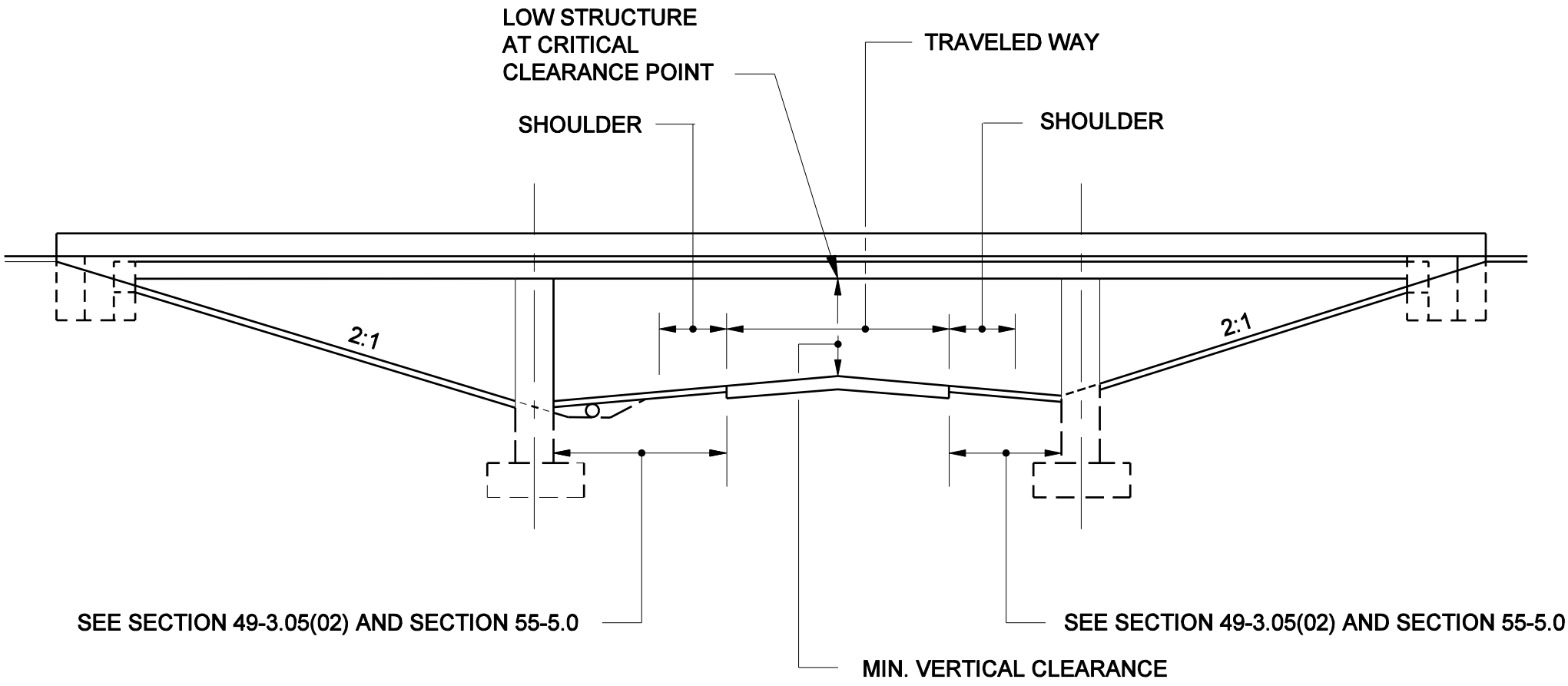

NEW BRIDGE UNPASS CROSS SECTION
(3R Project)

Figure 59-1M